Data and Computer Communications

Data Encoding

Digital Data, Digital Signal

Conversion Techniques

- The conversion involves three techniques:
  - **line coding**,
  - **block coding**, and
  - **scrambling**.

- Line coding is always needed;

  block coding and scrambling may or may not be needed.

Line Coding

- Converting a string of 1's and 0's (digital data) into a sequence of signals that denote the 1's and 0's.
- For example a high voltage level (+V) could represent a "1" and a low voltage level (0 or -V) could represent a "0".

Line coding and decoding

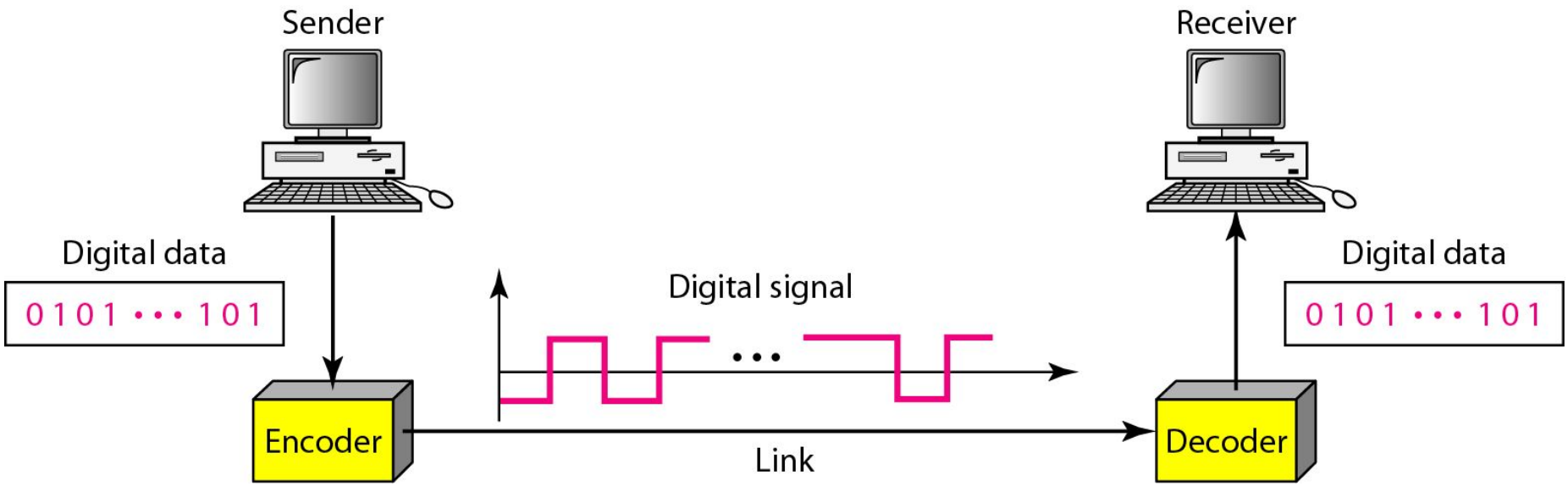

Line coding schemes

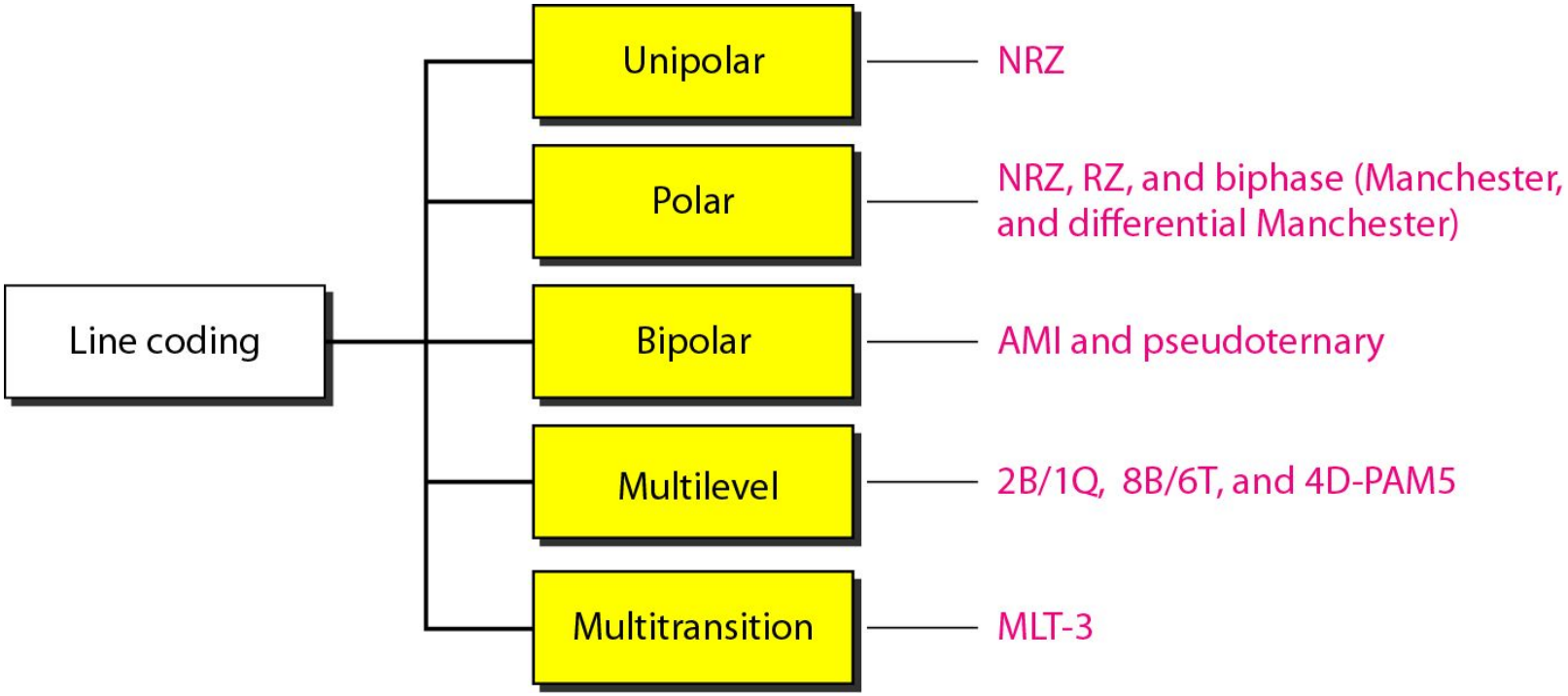

Interpreting Signals

- Need to know
  - Timing of bits - when they start and end
  - Signal levels
- Factors affecting successful interpreting of signals
  - Signal to noise ratio (SNR)
  - Data rate
  - Bandwidth
- With other factors held constant, the following statements are true:
  - An increase in data rate increases bit error rate (BER).
  - An increase in SNR decreases bit error rate.
  - An increase in bandwidth allows an increase in data rate.

Comparison of Encoding Schemes (1)

- Signal Spectrum

  Following aspects are to meet :
  - Lack of high-frequency components means that less bandwidth is required for transmission.
  - Lack of a direct-current (dc) component is also desirable. With a dc component to the signal, there must be direct physical attachment of transmission components
  - Lack of **dc** (direct current) component allows **ac** coupling via transformer, providing isolation and reducing interference.
  - **Signal design should concentrate the transmitted power in the middle of the bandwidth.**
    - In such a case, a smaller distortion should be present in the received signal. To meet this objective, codes can be designed with the aim of shaping the spectrum of the transmitted signal.
- Clocking

  To determine **beginning and end** of bit position following is reqd.
  - Synchronizing transmitter and receiver
  - External clock
  - Sync mechanism based on signal

  These can be achieved with suitable encoding scheme.

Comparison of Encoding Schemes (2)

- Error detection
  - Can be built in signal encoding. However it is done in Data Link Layer level.
- Signal interference and noise immunity
  - Some codes are better than others in the presence of noise.
  - Performance is usually expressed in terms of a BER.
- Cost and complexity
  - Higher signal rate (& thus data rate) leads to higher costs
  - Some codes require signal rate greater than data rate
- DC components - when the voltage level remains constant for long periods of time, there is an increase in the low frequencies of the signal. Most channels are bandpass and may not support the low frequencies.
  - This will require the removal of the dc component of a transmitted signal.

Mapping Data symbols onto Signal levels

- A data symbol (or element) can consist of a number of data bits:
  - 1 , 0 or
  - 11, 10, 01, ……
- A data symbol can be coded into a single signal element or multiple signal elements
  - 1 -> +V, 0 -> -V
  - 1 -> +V and -V, 0 -> -V and +V
- The ratio ‘r’ is the number of data elements carried by a signal element.

Relationship between data rate and signal rate

- The data rate defines the number of bits sent per sec - bps. It is often referred to the **bit rate.**
- The signal rate is the number of signal elements sent in a second and is measured in **bauds**. It is also referred to as the **modulation rate**.
- Goal is to increase the data rate whilst reducing the baud rate.

Signal element versus data element

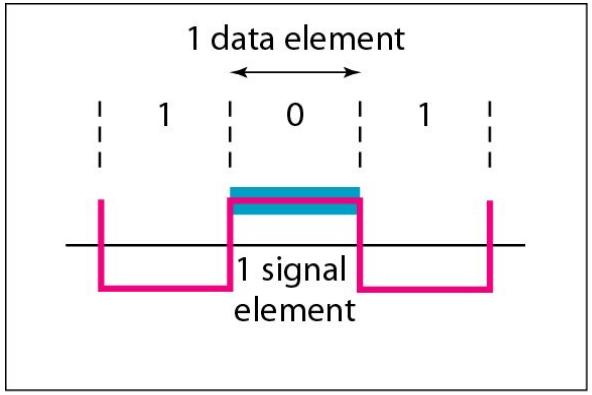

a. One data element per one signal element (r = 1)

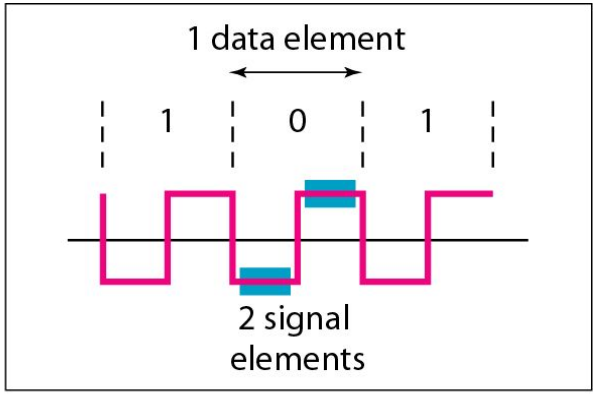

b. One data element per two signal elements $\left(r = \frac{1}{2}\right)$

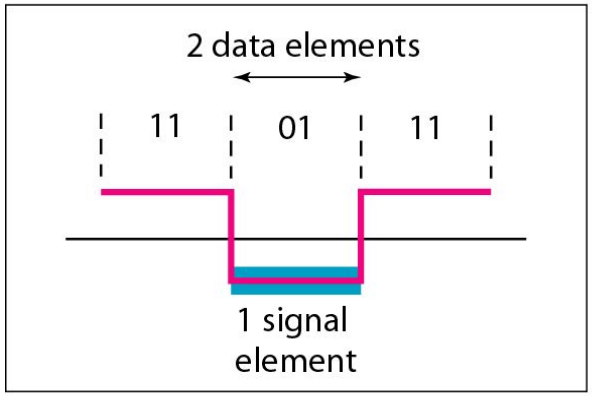

c. Two data elements per one signal element (r = 2)

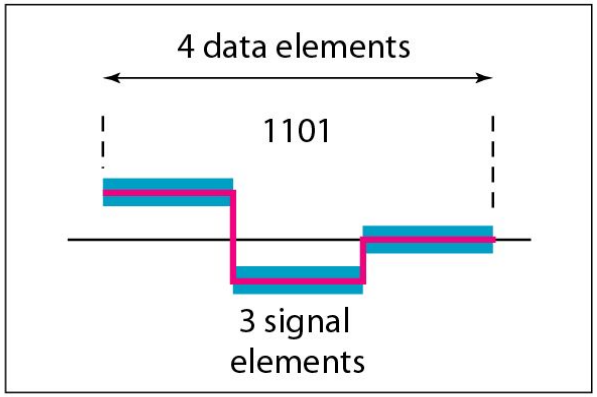

d. Four data elements per three signal elements $\left(r = \frac{4}{3}\right)$

Data rate and Baud rate

- The baud or signal rate can be expressed as:

  $S = c \times N \times 1/r$ bauds

  where N is data rate

  c is the case factor (worst, best & avg.)

  r is the ratio between data element & signal element

Example

A signal is carrying data in which one data element is encoded as one signal element (r = 1). If the bit rate is 100 kbps, what is the average value of the baud rate if c is between 0 and 1?

Solution

We assume that the average value of c is 1/2 . The baud rate is then

$$S = c \times N \times \frac{1}{r} = \frac{1}{2} \times 100{,}000 \times \frac{1}{1} = 50{,}000 = 50 \text{ kbaud}$$

Digital Signal Encoding Schemes

- Nonreturn to Zero-Level (NRZ-L)
- Nonreturn to Zero Inverted (NRZI)
- Bipolar –AMI (alternate mark inversion)
- Pseudoternary
- Manchester
- Differential Manchester
- B8ZS (bipolar with 8 zeros substitution)
- HDB3 (high-density bipolar—3 zeros)

Nonreturn to Zero-Level (NRZ-L)

0 = high level

1 = low level

Nonreturn to Zero Inverted (NRZI)

0 = no transition at beginning of interval (one bit time)

1 = transition at beginning of interval

Bipolar-AMI

0 = no line signal

1 = positive or negative level, alternating for successive ones

Pseudoternary

0 = positive or negative level, alternating for successive zeros

1 = no line signal

Manchester

0 = transition from high to low in middle of interval

1 = transition from low to high in middle of interval

Differential Manchester

Always a transition in middle of interval

0 = transition at beginning of interval

1 = no transition at beginning of interval

B8ZS

Same as bipolar AMI, except that any string of eight zeros is replaced by a string with two code violations

HDB3

Same as bipolar AMI, except that any string of four zeros is replaced by a string with one code violation

Nonreturn to Zero-Level (NRZ-L)

- Uses Two different voltages for 0 and 1 bits
- Voltage level is constant during a bit interval
  - **no transition i.e. no return to zero voltage**

- e.g. Absence of voltage can be used to represent for binary zero, constant positive voltage to represent for binary one.
- More often, **negative voltage** represents one binary value and positive for the other.
- This is NRZ-L
- NRZ-L is typically the **code used to generate or interpret digital data by terminals** and other devices.

Nonreturn to Zero Inverted

- A variation of NRZ is NRZ-I (Invert on ones)
- Maintains Constant voltage pulse for duration of bit time.
- Data encoded as presence or absence of signal transition **at beginning of bit time**
- Transition (low to high or high to low) at the beginning of a bit time denotes a binary 1
- No transition denotes binary 0
- NRZI is an example of **differential encoding**

NRZ

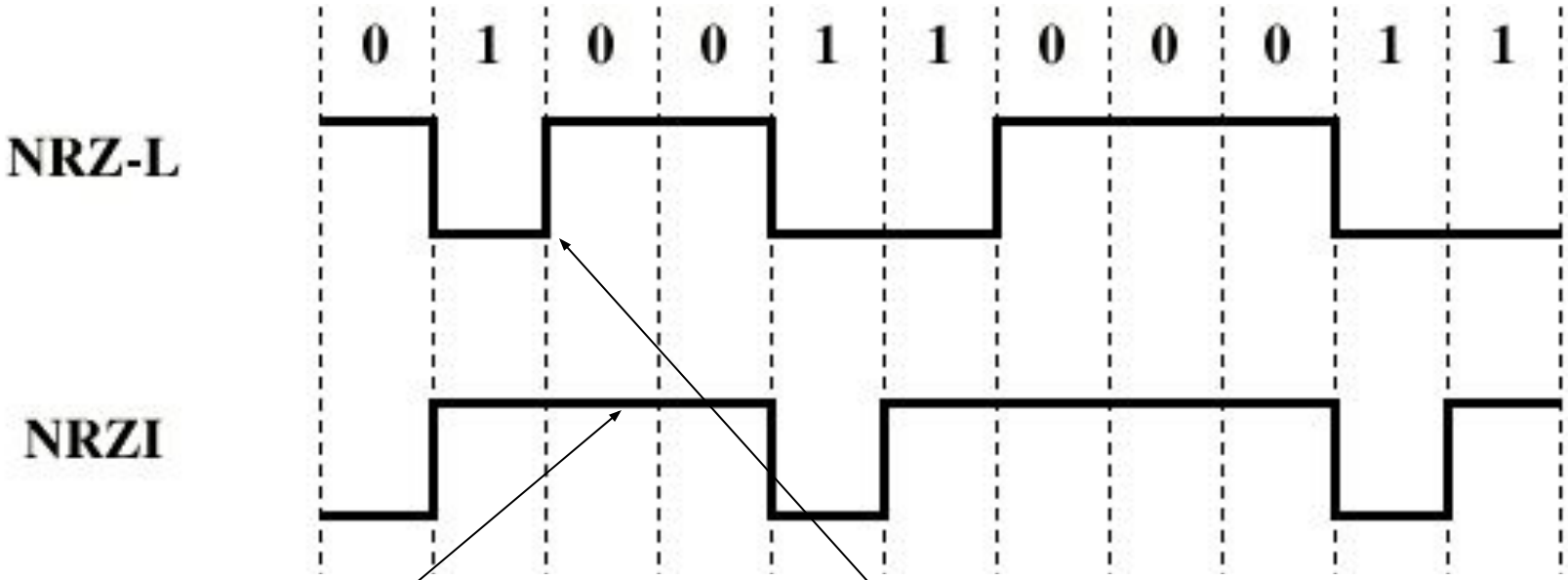

0's are as if don't care, only invert on 1's

Negative voltage represent 1's.

Differential Encoding

- **Data represented by changes** between successive signal elements rather than levels
- More reliable detection of transition rather than level
- If the current bit is 0, then the current bit is encoded with the **same signal as the preceding bit**
- if the current bit is a binary 1, then the current bit is encoded with a **different signal than the preceding bit**
- In complex transmission layouts it is easy to lose sense of polarity

NRZ pros and cons

- Pros
  - Easy to engineer
  - Make good use of bandwidth
- Cons
  - The presence of dc component
  - Lack of synchronization capability
- Used for **magnetic recording**
- Not often used for signal transmission

Multilevel Binary

- Uses more than two levels
- **Bipolar-AMI (alternate mark inversion)**
  - *zero represented by no line signal*
  - *one represented by positive or negative pulse*
  - The binary 1 pulses must alternate in polarity
  - No loss of sync if a long string of ones (zeros still a problem). Each 1 introduces a transition, and the receiver can resynchronize on that transition.
  - because the 1 signals alternates in voltage from positive to negative, no net dc component
  - Lower bandwidth
  - Easy error detection
  - **Long string of 0's may result in loss of synchronization**

Pseudoternary

- One represented **by absence** of line signal
- Zero represented **by alternating positive and negative**
- No advantage or disadvantage over bipolar-AMI
- Long string of 1's will be problem due to synchronization.

Bipolar-AMI and Pseudoternary

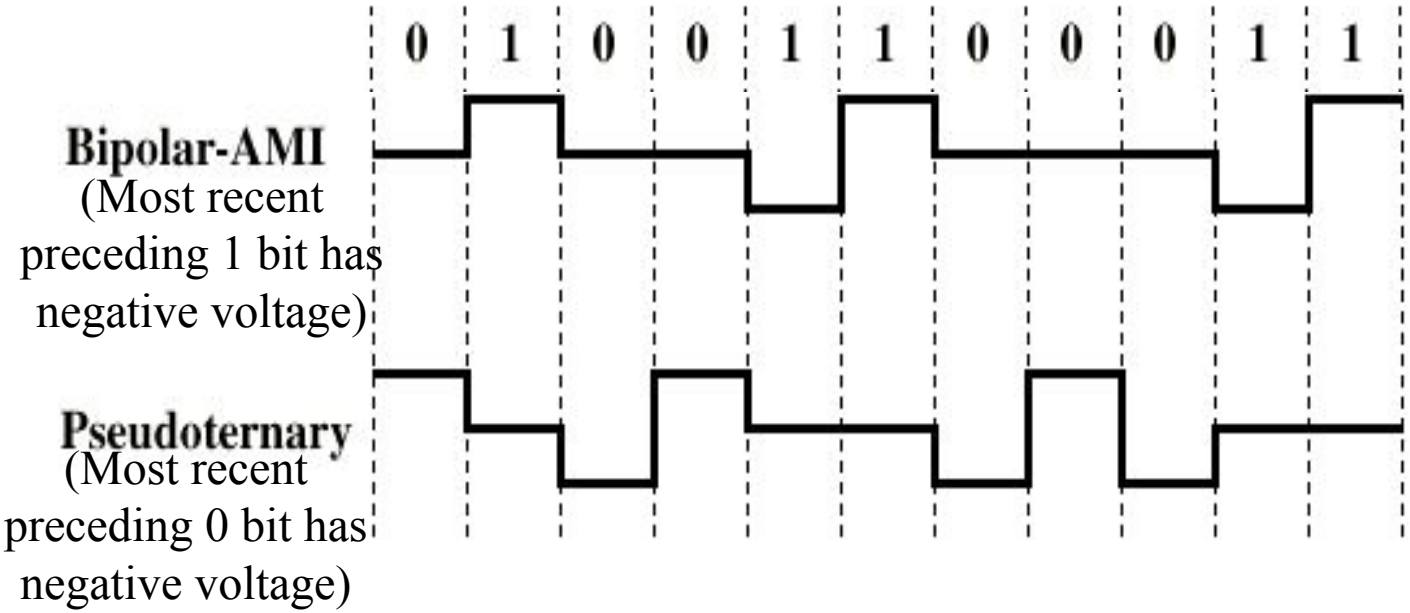

Polar - RZ

- The Return to Zero (RZ) scheme uses three voltage values. +, 0, -.
- Each symbol has a transition in the middle. Either from high to zero or from low to zero.
- This scheme has more signal transitions (two per symbol) and therefore requires a wider bandwidth.
- No DC components or baseline wandering.
- Self synchronization - transition indicates symbol value.
- More complex as it uses three voltage levels. It has no error detection capability.

Polar RZ scheme

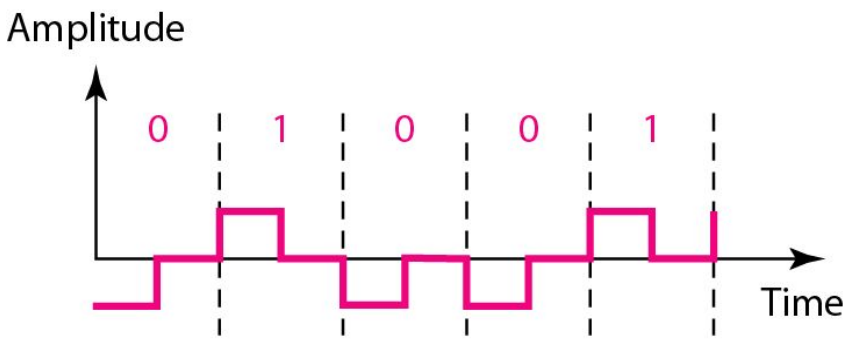

Trade Off for Multilevel Binary

- Not as efficient as NRZ
  - Each **signal element** only represents one bit
  - In a 3 level system could represent **$\log_2 3 = 1.58$ bits**
  - Receiver must distinguish between three levels (+A, -A, 0)
  - **Requires** approx. 3dB **more signal power** for same probability of bit error

Biphase or Polar biphase

- **Manchester encoding**
- It consists of combining the NRZ-L and RZ schemes.
  - **Every symbol has a level transition in middle of each bit period**
  - Transition serves as clock and data
  - Low to high represents one
  - High to low represents zero
  - Uses only two voltage levels.
  - Used by IEEE 802.3 (i.e. ethernet)

Biphase or Polar biphase

- **Differential Manchester**
- It consists of combining the NRZ-I and RZ schemes.
  - Every symbol has a level transition in the middle. But the level at the beginning of the symbol is determined by the symbol value. One symbol causes a level change, the other does not.
  - Midbit transition is clocking only
  - **Transition at start of a bit period represents zero**
  - **No transition at start of a bit period represents one**
  - Note: this is a differential encoding scheme
  - Used by IEEE 802.5 (i.e. token ring)

Polar biphase: Manchester and differential Manchester schemes

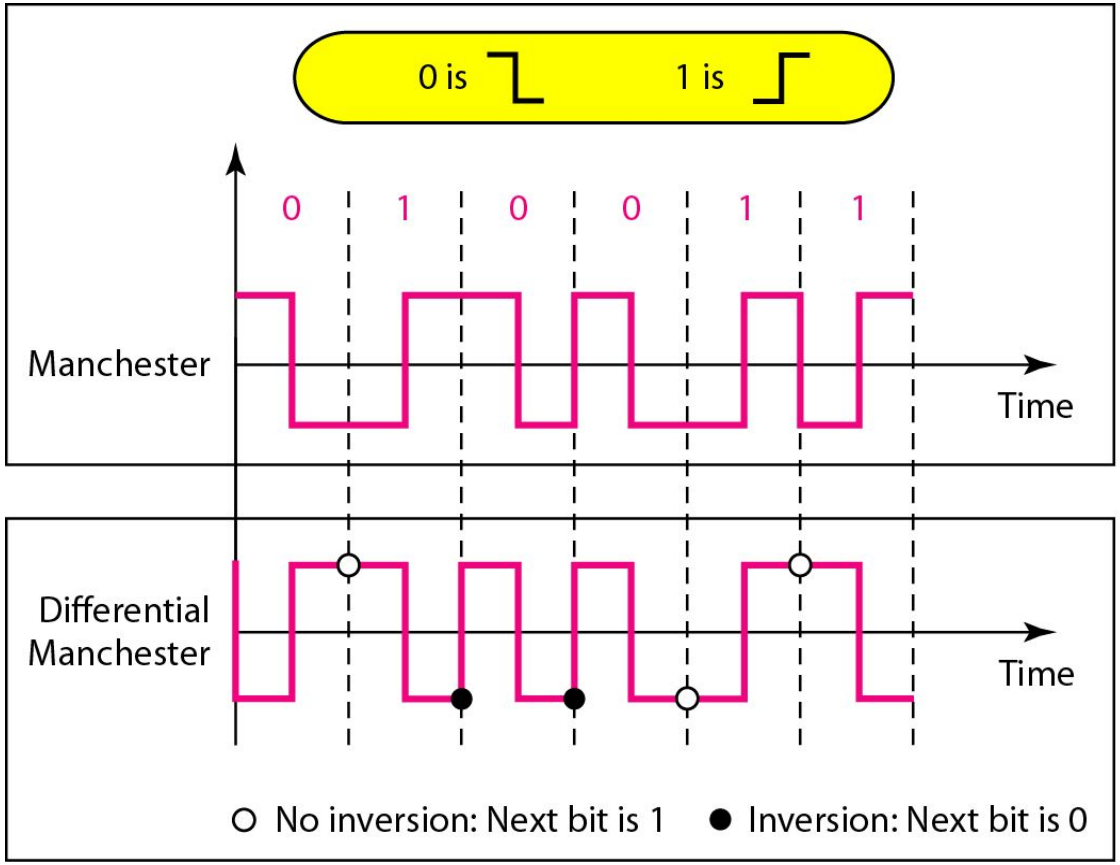

Transition at middle of the bit is used for synchronization

Biphase Pros and Cons

- Con
  - At least one transition per bit time and possibly two
  - Maximum modulation rate is twice NRZ
  - Requires more bandwidth
- Pros
  - Synchronization on mid bit transition (self clocking)
  - No dc component
  - Error detection
    - Absence of expected transition

Modulation Rate

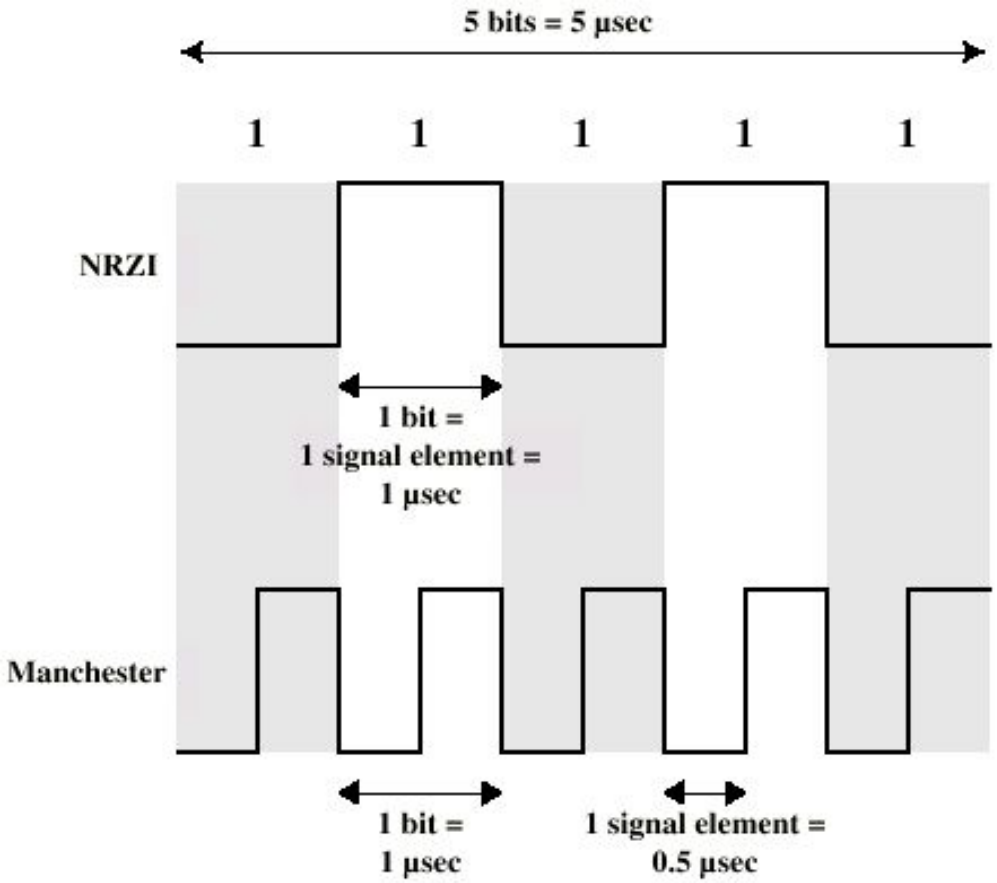

Figure 5.5 A Stream of Binary Ones at 1 Mbps

Block Coding

- For a code to be capable of error detection, we need to add redundancy, i.e., extra bits to the data bits.
- Synchronization also requires redundancy - transitions are important in the signal flow and must occur frequently.
- Block coding is done in three steps:
  - division, substitution and combination.
- It is distinguished from multilevel coding by use of the slash - xB/yB.
- **Block coding is normally referred to as *m*B/*n*B coding;**
  - **it replaces each *m*-bit group with an *n*-bit group.**
- The resulting bit stream prevents certain bit combinations that when used with line encoding would result in DC components or poor sync. quality.

Block coding

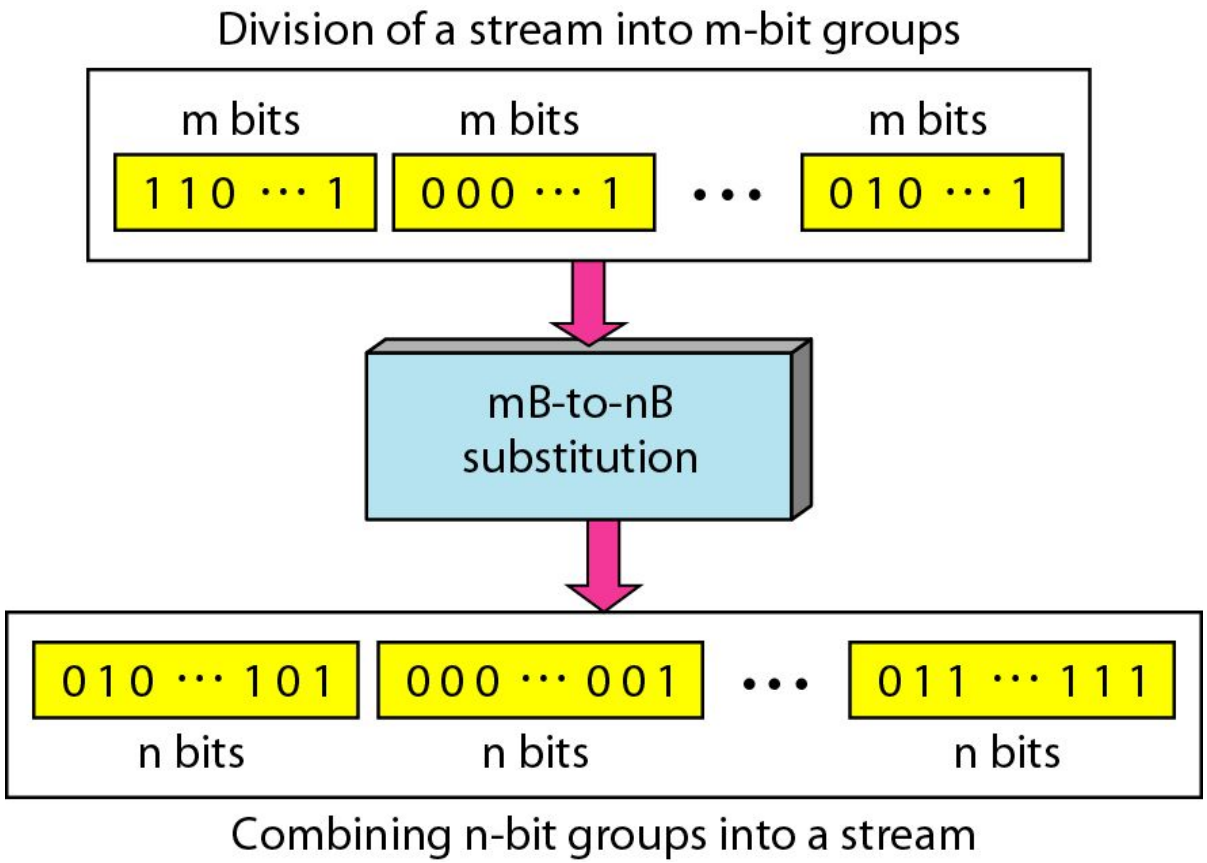

Using block coding 4B/5B with NRZ-I line coding scheme

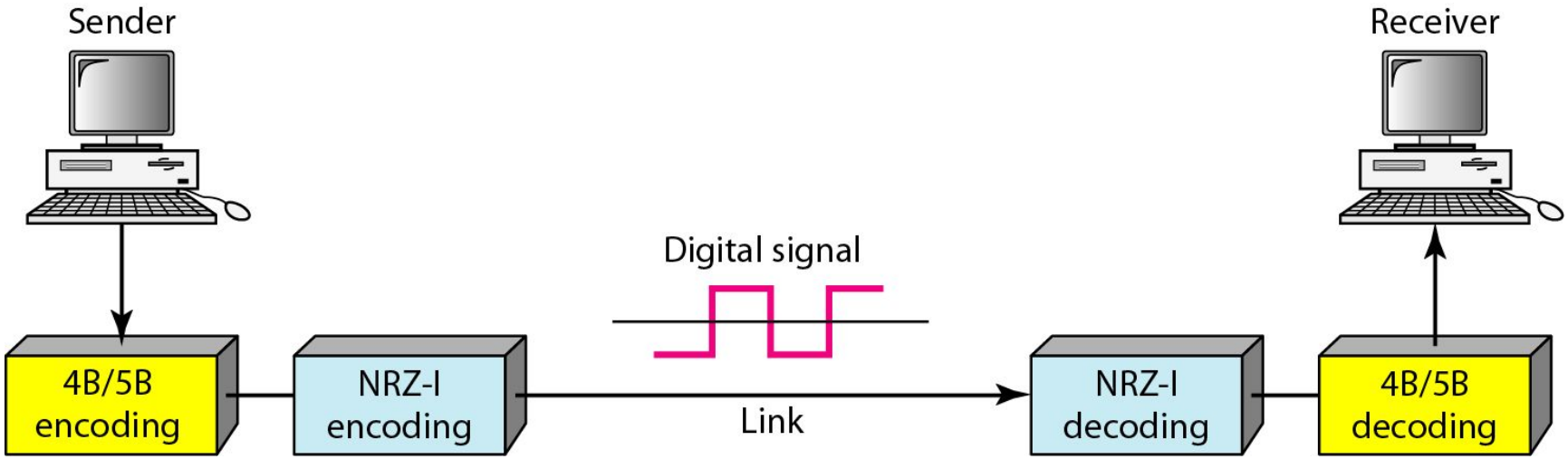

4B/5B mapping codes

Data Sequence	*Encoded Sequence*	*Control Sequence*	*Encoded Sequence*
0000	11110	Q (Quiet)	00000
0001	01001	I (Idle)	11111
0010	10100	H (Halt)	00100
0011	10101	J (Start delimiter)	11000
0100	01010	K (Start delimiter)	10001
0101	01011	T (End delimiter)	01101
0110	01110	S (Set)	11001
0111	01111	R (Reset)	00111
1000	10010		
1001	10011		
1010	10110		
1011	10111		
1100	11010		
1101	11011		
1110	11100		
1111	11101		

Substitution in 4B/5B block coding

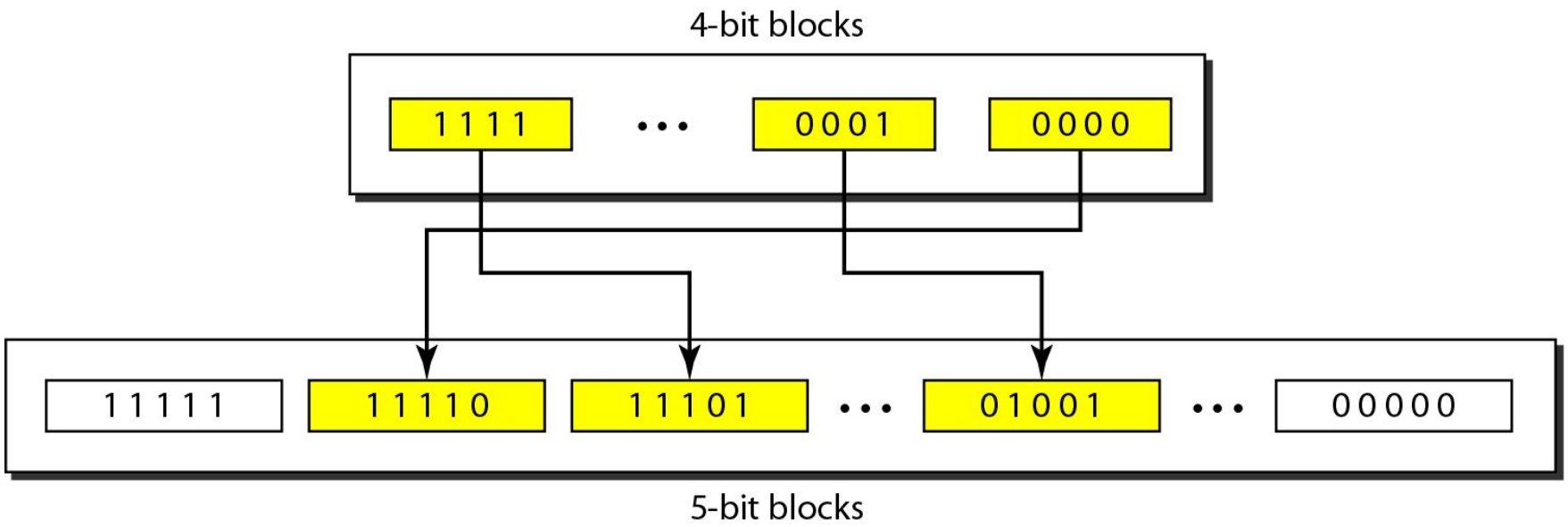

Redundancy

- A 4 bit data word can have 24 combinations.
- A 5 bit word can have 32 combinations.
  - That is 25 bit data is mapped into 32 bits word

- We therefore have 32 - 26 = 16 extra words.
- Some of the extra words are used for control/signaling purposes.

Scrambling

- Use scrambling **to replace sequences that would produce constant voltage**
- Filling sequence
  - Must produce enough transitions to sync
  - Must be recognized by receiver and replace with original
  - Same length as original
- No dc component
- No long sequences of zero level line signal
- No reduction in data rate
- Error detection capability

B8ZS

- Bipolar With **8 Zeros Substitution**
- Based on bipolar-AMI
- If octet of all zeros and last voltage pulse preceding was positive encode as 000+-0-+
- If octet of all zeros and last voltage pulse preceding was negative encode as 000-+0+-
- Causes two violations of AMI code that is used to syn up on reception
- Unlikely to occur as a result of noise or other impairments
- Receiver detects and interprets as octet of all zeros

HDB3

- High Density **Bipolar 3 Zeros**
- Based on bipolar-AMI
- String of four zeros replaced with one or two pulses

Table 5.4 HDB3 Substitution Rules

	Number of Bipolar Pulses (ones) since Last Substitution	
Polarity of Preceding Pulse	**Odd**	**Even**
−	000 −	+ 00 +
+	000 +	− 00 −

B8ZS and HDB3

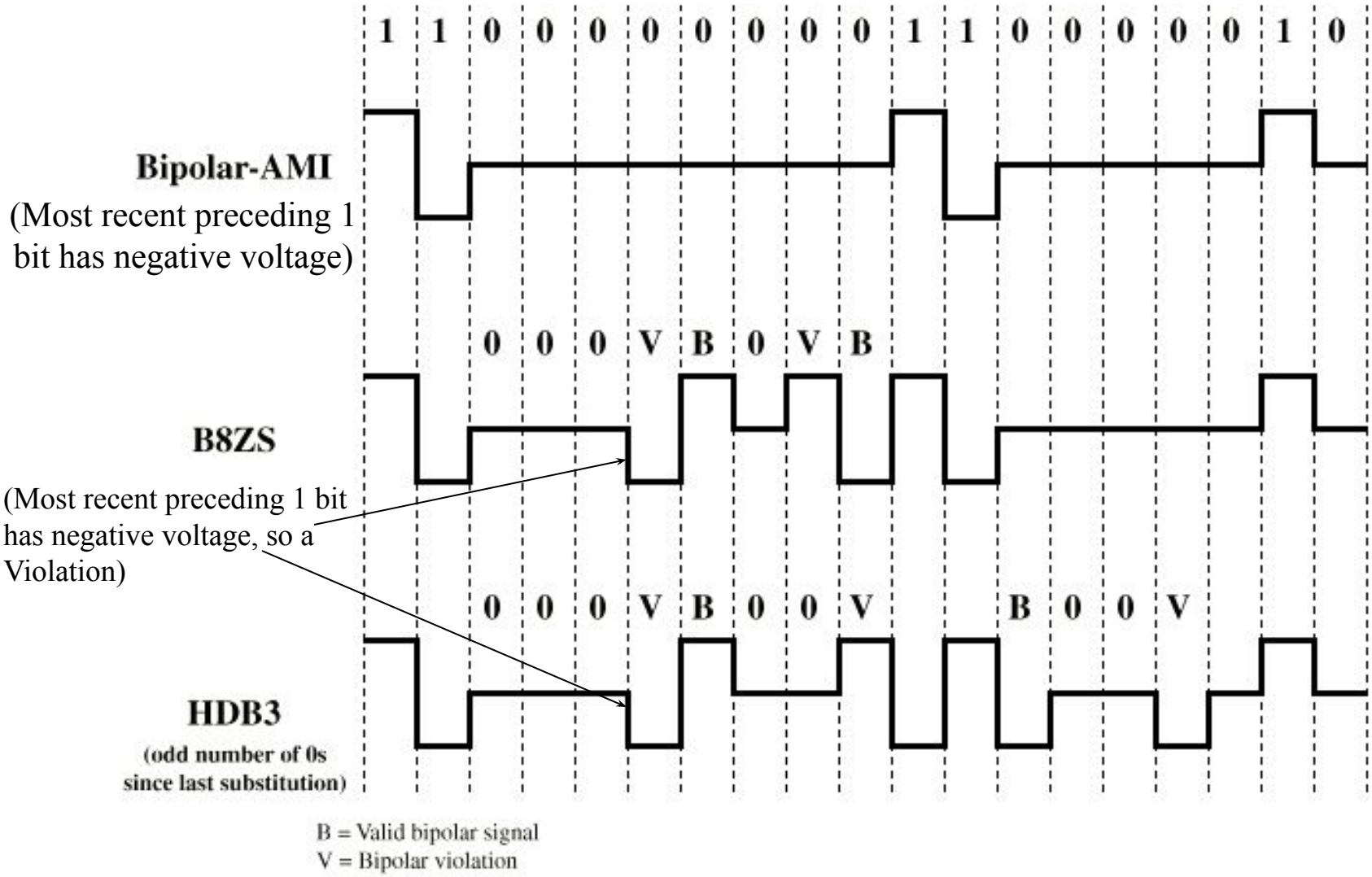

Some advanced schemes

- You may study to improve your understanding level

Multilevel Schemes

- In these schemes we increase the number of data bits per symbol thereby increasing the bit rate.
- Since we are dealing with binary data we only have 2 types of data element a 1 or a 0.
- We can combine the 2 data elements into a pattern of "m" elements to create "2^m" symbols.
- If we have L signal levels, we can use "n" signal elements to create L^n signal elements.

Multilevel Schemes

- Now we have 2^m symbols and L^n signals.
- If $2^m > L^n$ then we cannot represent the data elements, we don't have enough signals.
- If $2^m = L^n$ then we have an exact mapping of one symbol on one signal.
- If $2^m < L^n$ then we have more signals than symbols and we can choose the signals that are more distinct to represent the symbols and therefore have better noise immunity and error detection as some signals are not valid.

Representing Multilevel Codes

- We use the notation **mBnL**,
  - where **m** is the length of the binary pattern, **B** represents binary data, **n** represents the length of the signal pattern and **L** the number of levels.
- L stands for
  - L = B binary,
  - L = T for 3 ternary,
  - L = Q for 4 quaternary.

Multilevel: 2B1Q scheme

Next bits	Previous level: positive Next level	Previous level: negative Next level
00	+1	-1
01	+3	-3
10	-1	+1
11	-3	+3

Transition table

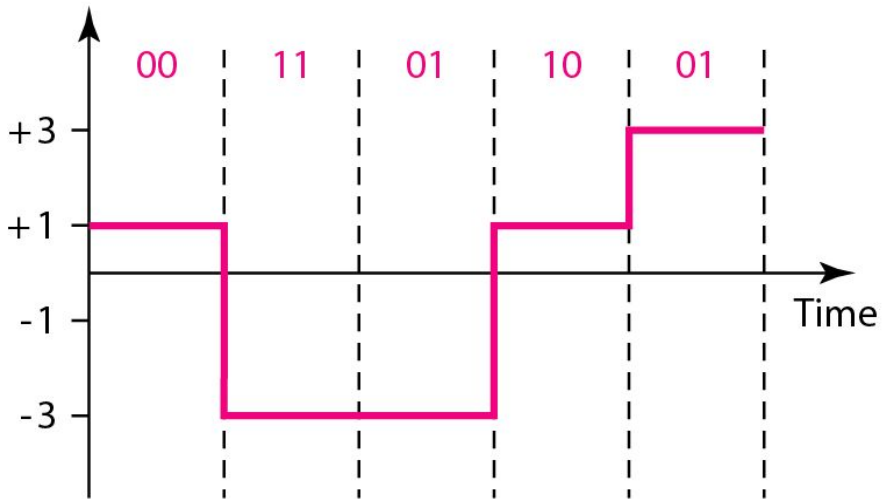

Assuming positive original level

Redundancy

- In the 2B1Q scheme we have no redundancy and we see that a DC component is present.
- If we use a code with redundancy we can decide to use only “0” or “+” weighted codes (more +’s than -’s in the signal element) and invert any code that would create a DC component. E.g. ‘+00++-’ -> ‘-00--+’
- Receiver will know when it receives a “-” weighted code that it should invert it as it doesn’t represent any valid symbol.

Multilevel: 8B6T scheme

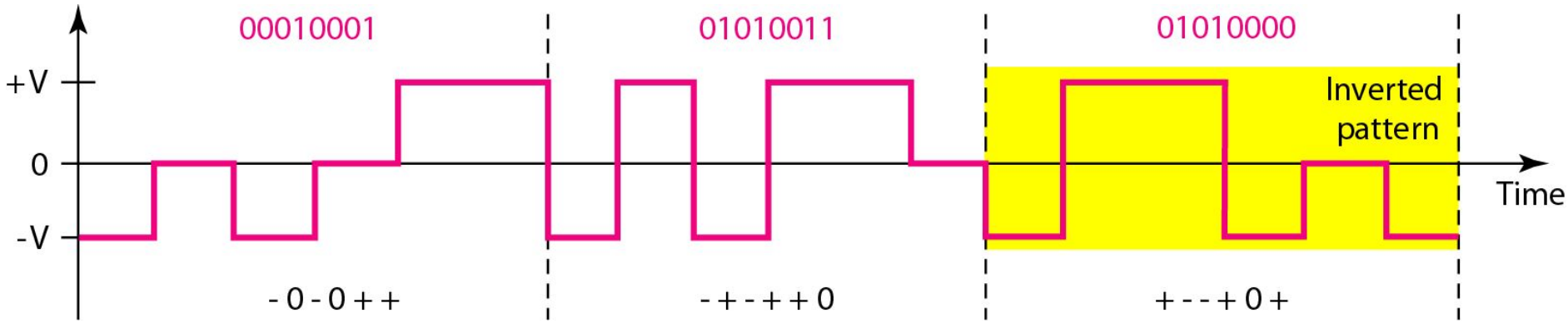

Multilevel using multiple channels

- In some cases, we split the signal transmission up and distribute it over several links.
- The separate segments are transmitted simultaneously. This reduces the signalling rate per link -> lower bandwidth.
- This requires all bits for a code to be stored.
- xD: means that we use ‘x’ links
- YYYz: We use ‘z’ levels of modulation where YYY represents the type of modulation (e.g. pulse ampl. mod. PAM).
- Codes are represented as: xD-YYYz

Multilevel: 4D-PAM5 scheme

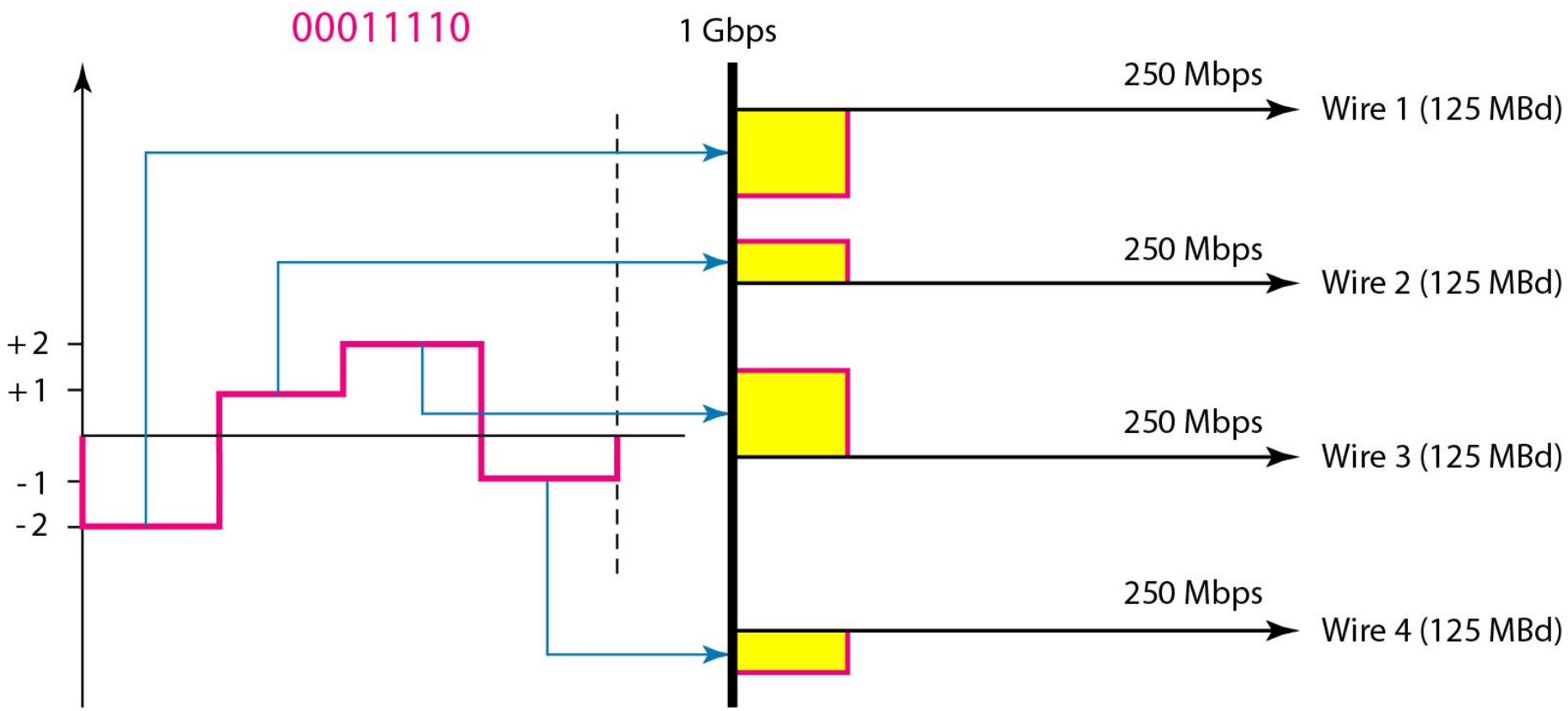

MuLtiTransition (MLT) Coding

- Because of synchronization requirements we force transitions. This can **result in very high bandwidth requirements**
  - more transitions than are bits (e.g. mid bit transition with inversion).
- Codes can be created that are differential at the bit level forcing transitions at bit boundaries. This **results in a bandwidth requirement that is equivalent to the bit rate.**
- In some instances, the bandwidth requirement may even be lower, due to repetitive patterns resulting in a periodic signal.

Multitransition: MLT-3 scheme

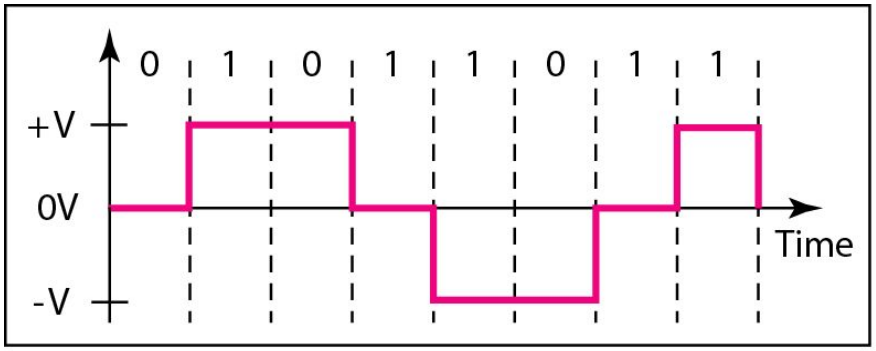

a. Typical case

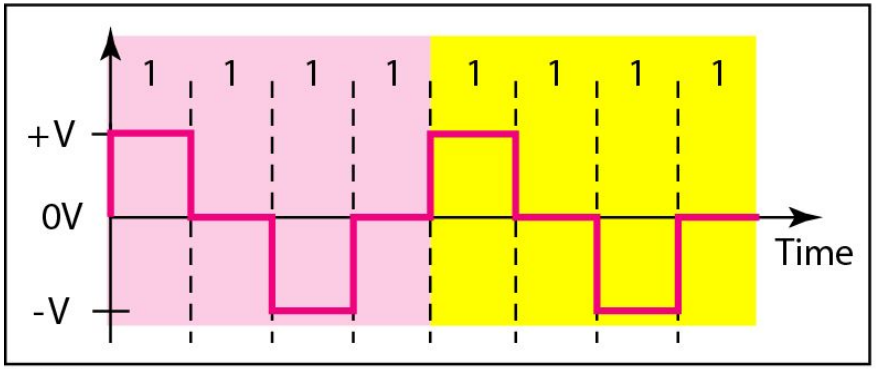

b. Worse case

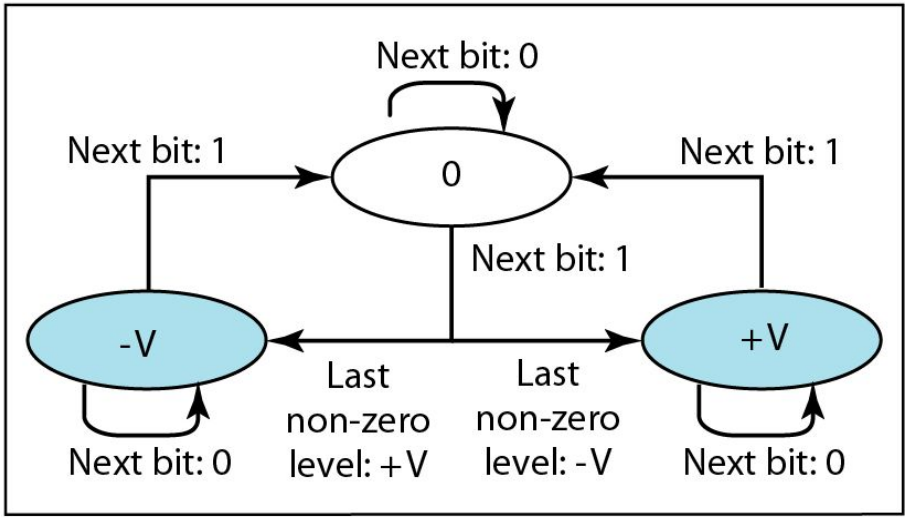

c. Transition states

MLT-3

- Signal rate is same as NRZ-I
- But because of the resulting bit pattern, we have a periodic signal for worst case bit pattern: 1111
- This can be approximated as an analog signal a frequency 1/4 the bit rate!

Summary of line coding schemes

Category	*Scheme*	*Bandwidth (average)*	*Characteristics*
Unipolar	NRZ	$B = N/2$	Costly, no self-synchronization if long 0s or 1s, DC
Unipolar	NRZ-L	$B = N/2$	No self-synchronization if long 0s or 1s, DC
	NRZ-I	$B = N/2$	No self-synchronization for long 0s, DC
	Biphase	$B = N$	Self-synchronization, no DC, high bandwidth
Bipolar	AMI	$B = N/2$	No self-synchronization for long 0s, DC
Multilevel	2B1Q	$B = N/4$	No self-synchronization for long same double bits
	8B6T	$B = 3N/4$	Self-synchronization, no DC
	4D-PAM5	$B = N/8$	Self-synchronization, no DC
Multiline	MLT-3	$B = N/3$	No self-synchronization for long 0s

CDM / Spread Spectrum (SS)

CDM / Spread Spectrum (SS)

- Basis of Code Division Multiplexing (CDM)
- Analog or digital data
- Analog signal
- **Spread data over wide bandwidth**
- Makes jamming and interception harder
- **Frequency hoping spread spectrum(FHSS)**
  - Technique transmitting radio signals by rapidly switching a carrier among many frequency channels, using a pseudorandomchannels, using a pseudorandom sequence known to both transmitterchannels, using a pseudorandom sequence known to both transmitter and receiver.
  - Signal is broadcast over seemingly random series of frequencies
- **Direct Sequence spread spectrum(DSSS)**
  - Each bit is represented by multiple bits in transmitted signal
  - Chipping code

FHSS

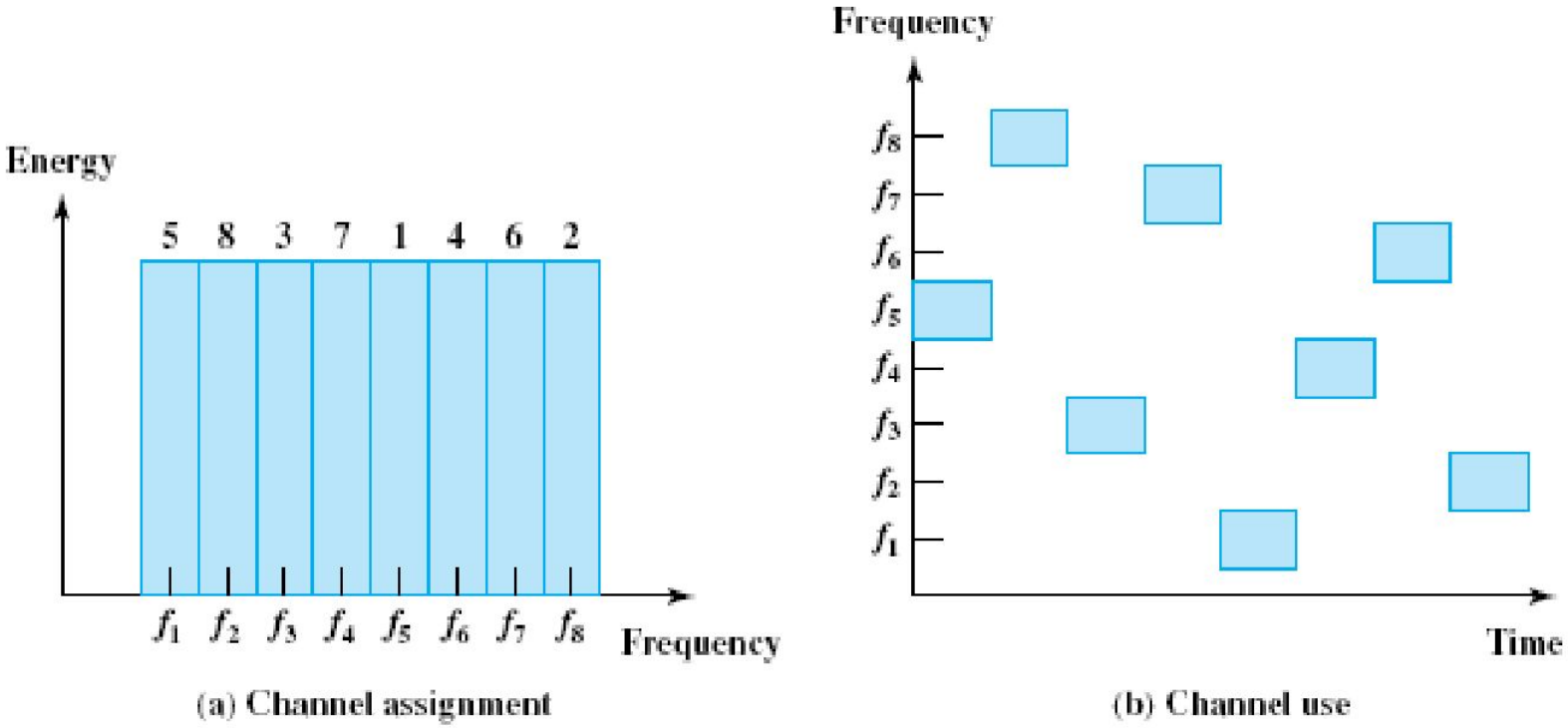

Figure 9.2 Frequency-Hopping Example

FHSS

- A typical block diagram for a frequency-hopping system is shown in the Figure.
- For transmission, binary data are fed into a modulator using some digital-to-analog encoding scheme, such as frequency shift keying (FSK) or binary phase shift keying (BPSK). The resulting signal is centered on some base frequency.
- **A pseudonoise (PN), or pseudorandom number, source serves as an index into a table of frequencies; this is the spreading code referred to previously □ spreading code**
- Each *k* bits of the PN source specifies one of the carrier frequencies. At each successive interval (each *k* PN bits), a new carrier frequency is selected. This frequency is then modulated by the signal produced from the initial modulator to produce a new signal with the same shape but now centered on the selected carrier frequency.
- On reception, the spread spectrum signal is demodulated using the same sequence of PN-derived frequencies and then demodulated to produce the output data.

Frequency Hopping CDMA

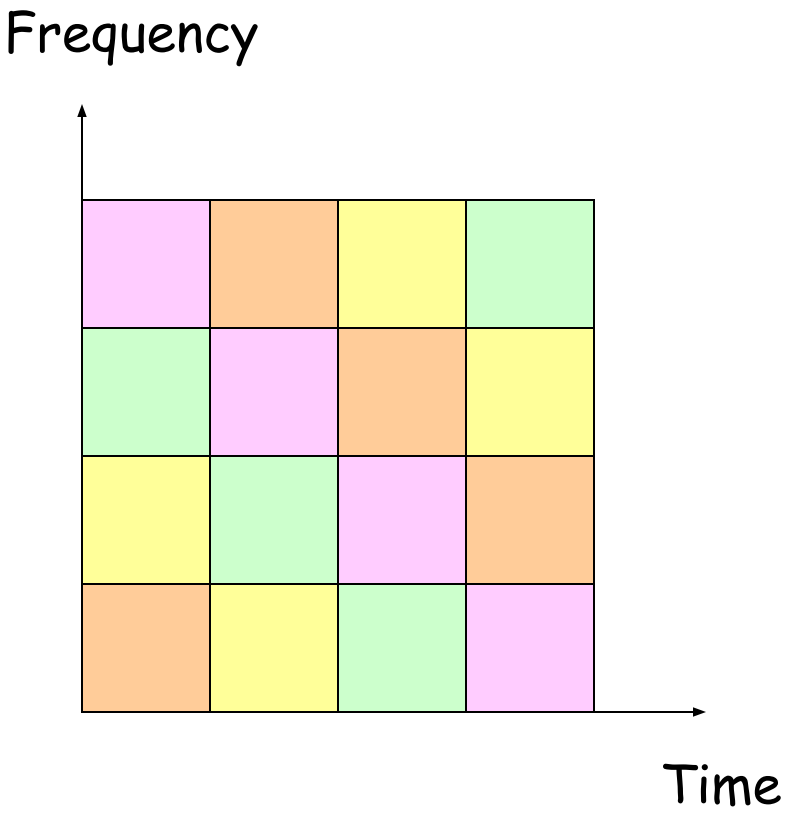

At each successive time slot, the frequency band assignments are reordered.

Each user employs a code that dictates the frequency hopping pattern.

Synchronization

- The previous figure implies that each signal synchronizes with each of the other signals.
- In practice, this is *not the case*.
- Frequency hops may collide, but it does not occur frequently.
  - How often collisions occur depends on the choice of *codes*.

Direct Sequence CDMA

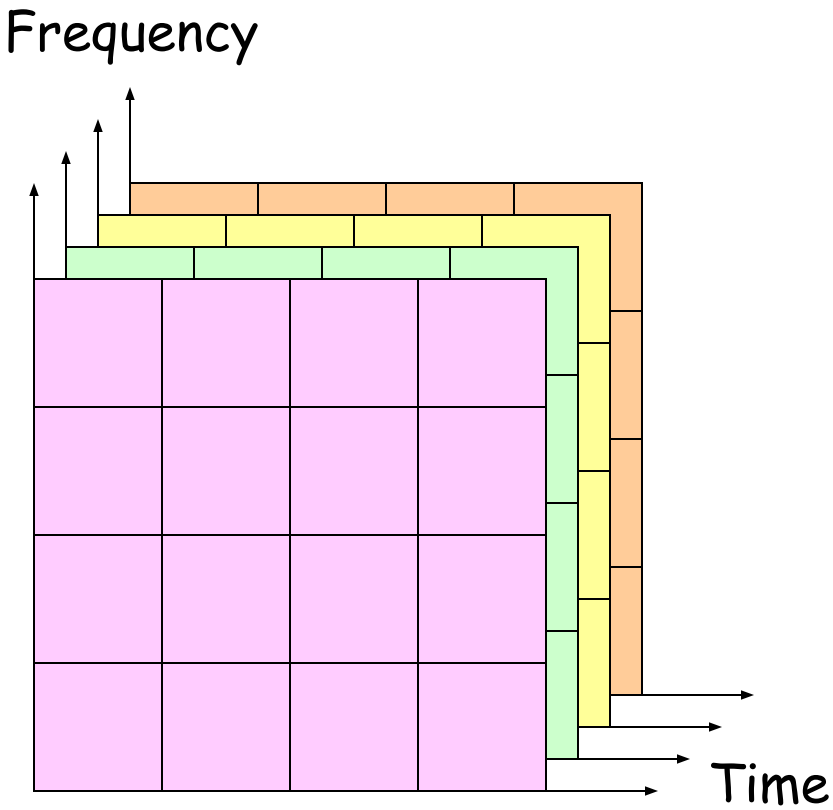

All users occupy the whole bandwidth all the time.

Signals of different users overlap with one other.

How can it be done?

CDMA Encoding

- Each user is assigned a unique signature sequence (or code), denoted by $(c_1, c_2, \ldots, c_M)$. Its component is called a chip.

- Each bit, d_i, is encoded by multiplying the bit by the signature sequence:

$$Z_{i,m} = d_i \, c_m$$

Encoding Example

- Data bit

  $d_1 = -1$
- Signature sequence

  $(c_1, c_2, \ldots, c_8) = (+1, +1, +1, -1, +1, -1, -1, -1)$
- Encoder Output

  $(Z_{1,1}, Z_{1,2}, \ldots, Z_{1,8}) = (-1, -1, -1, +1, -1, +1, +1, +1)$

Bandwidth

- Note that the chip rate is much higher than the data rate.
- Consider an example.
  - Suppose the original data signal occupies a bandwidth of *W*.
  - *What is the bandwidth of the encoded signal?*

Spread Spectrum Technique

The bandwidth expands by a factor of M.

M is called spreading factor or processing gain.

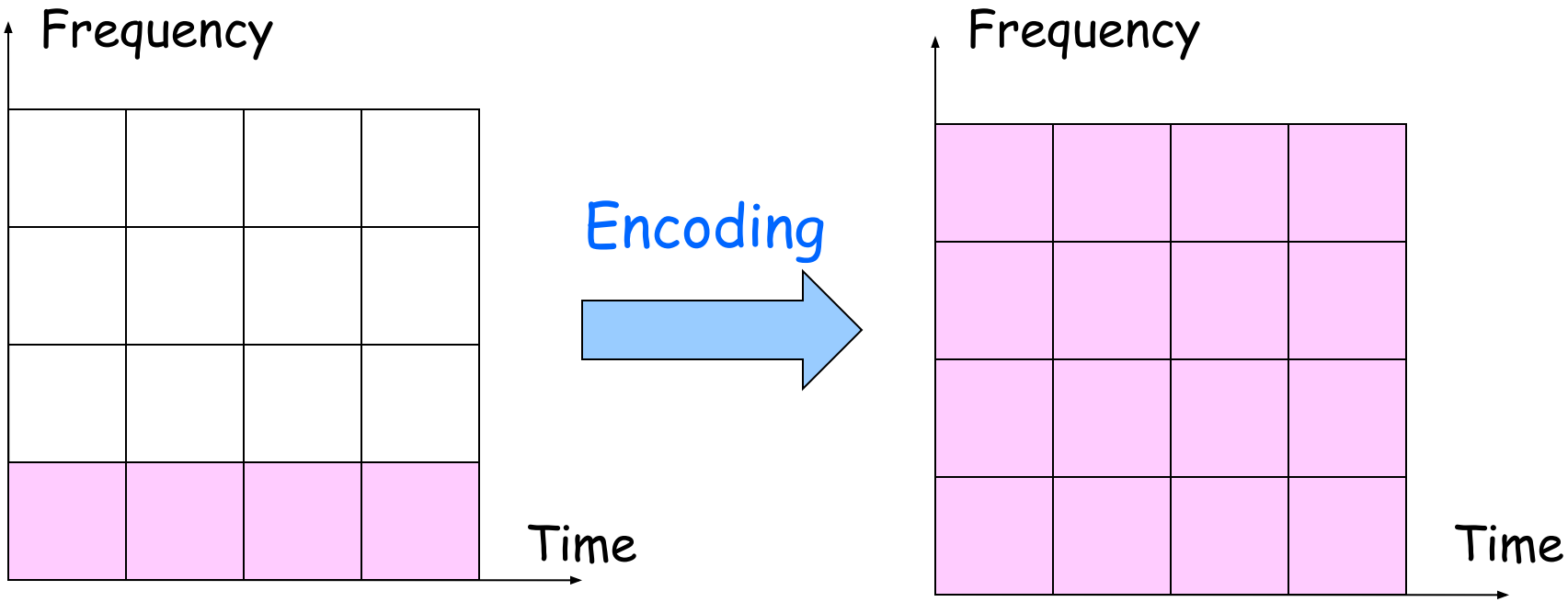

Spread Spectrum Technique: Methods by which a signal generated in a particular bandwidth is deliberately spread in the frequency domain, resulting in a signal with a wider bandwidth.

- These techniques are used for a variety of reasons, including the establishment of **secure communications, increasing resistance to natural interference and jamming, to prevent detection, and to limit power flux density** (e.g. in satellite downlinks).

CDMA Decoding

- Without interfering users, the receiver would receive the encoded bits, $Z_{i,m}$, and recover the original data bit, d_i, by computing:

$$d_i = \frac{1}{M} \sum_{m=1}^{M} Z_{i,m} c_m$$

CDMA Decoding Example

$$(c_1, c_2, \ldots, c_8) = (+1,+1,+1,-1,+1,-1,-1,-1)$$

$$(Z_{1,1}, Z_{1,2}, \ldots, Z_{1,8}) = (-1,-1,-1,+1,-1,+1,+1,+1)$$

multiply

$$(-1,-1,-1,-1,-1,-1,-1,-1)$$

add and divide by M

$$d_i = -1$$

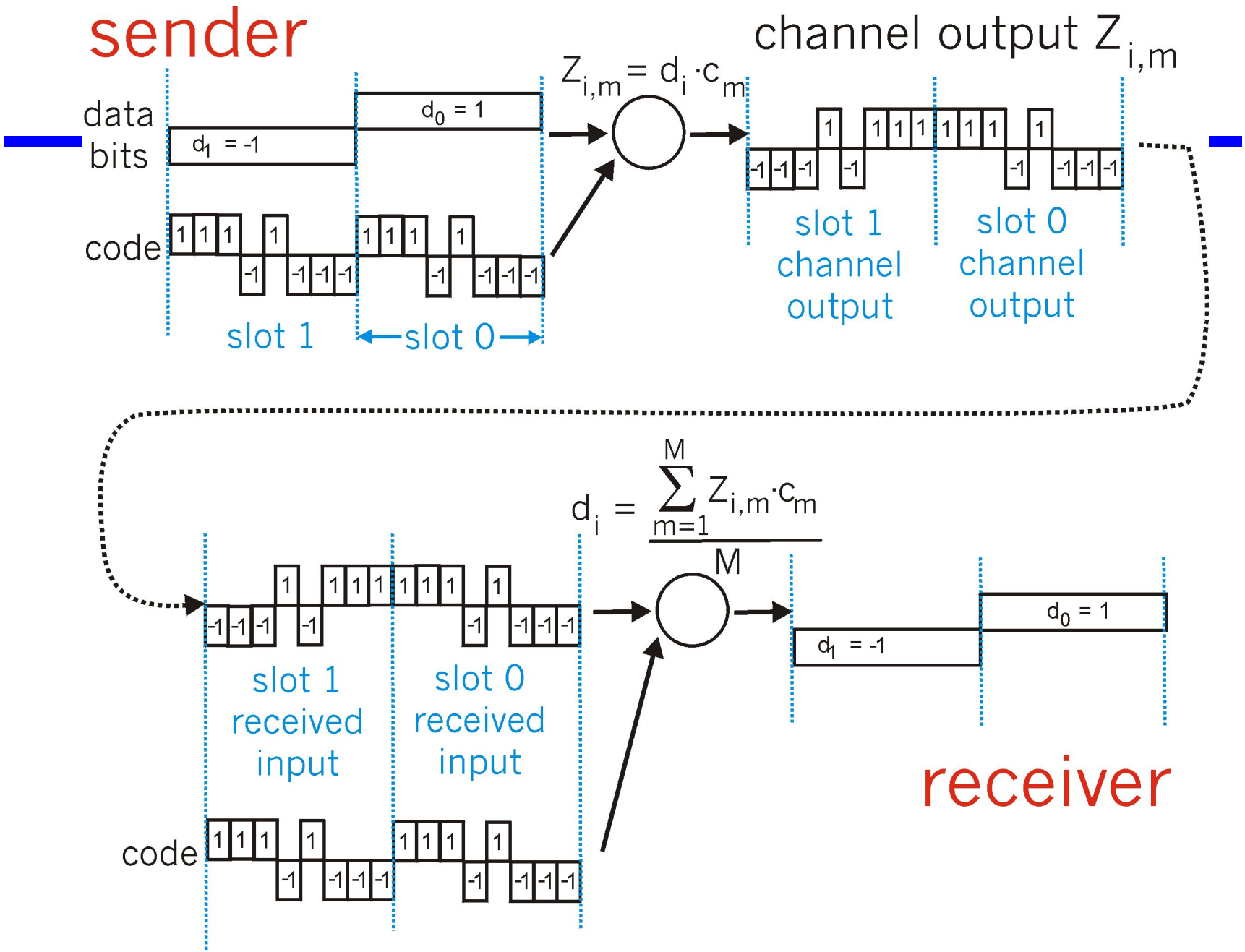
sender
data bits
$d_1 = -1$
$d_0 = 1$
code
slot 1
slot 0
$Z_{i,m} = d_i \cdot c_m$
channel output $Z_{i,m}$
slot 1 channel output
slot 0 channel output
$d_i = \frac{\sum_{m=1}^{M} Z_{i,m} \cdot c_m}{M}$
slot 1 received input
slot 0 received input
code
$d_1 = -1$
$d_0 = 1$
receiver

Multiuser Scenario

- If there are *N* users, the signal at the receiver becomes:

$$Z_{i,m}^{*} = \sum_{n=1}^{N} Z_{i,m}^{n}$$

- *How can a CDMA receiver recover a user's original data bit?*

2-user example

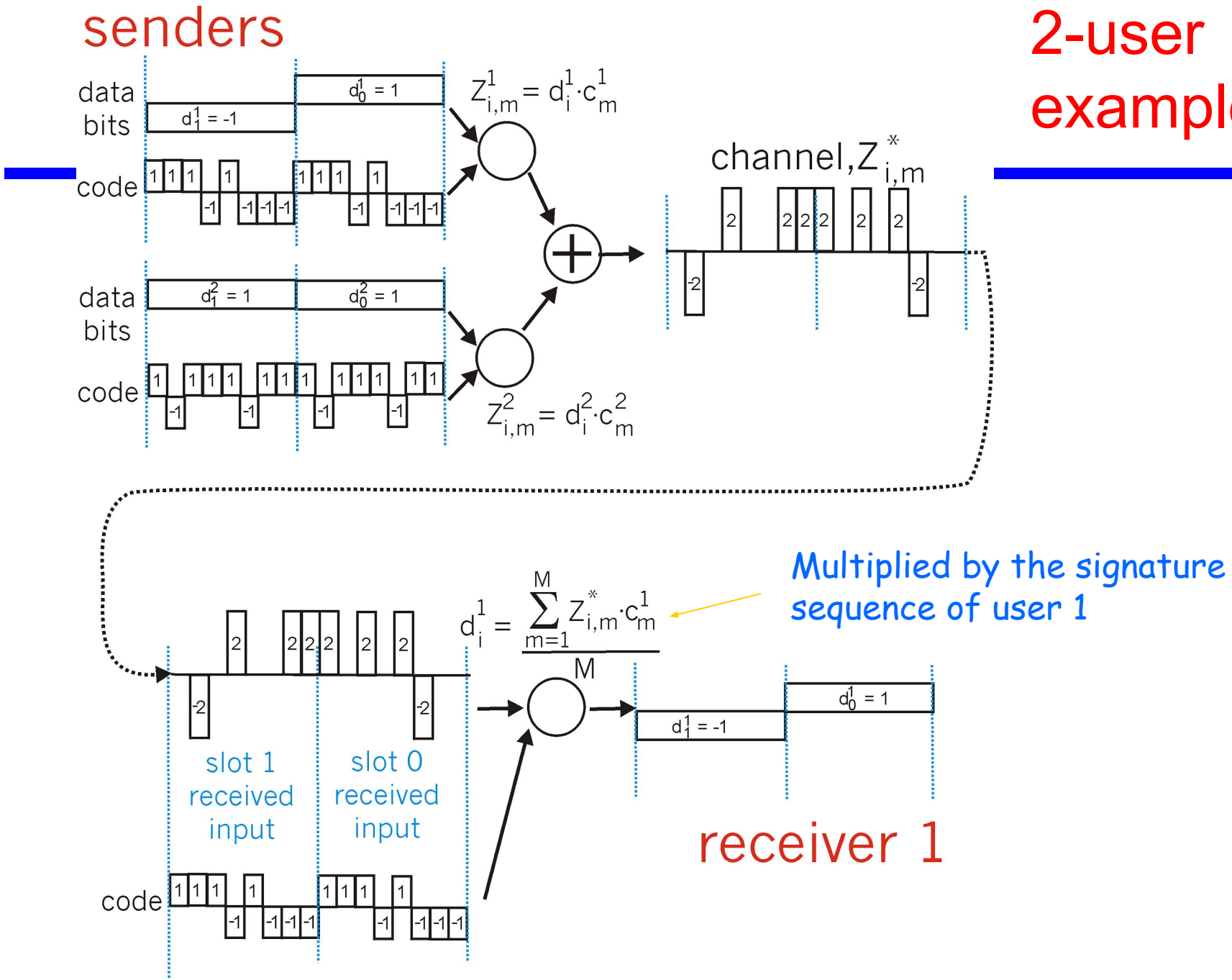

Signature Sequences

- In order for the receiver to be able to extract out a particular sender's signal, the CDMA codes must be of low correlation.
- Correlation of two codes, $(c_{j,1},\ldots, c_{j,M})$ and $(c_{k,1},\ldots, c_{k,M})$, are defined by inner product:

$$\frac{1}{M}\sum_{m=1}^{M} c_{j,m} c_{k,m}$$

The Meaning of Correlation

- What is correlation?
  - It determines how much similarity one sequence has with another.
  - It is defined with a range between –1 and 1.

Correlation Value	Interpretation
1	The two sequences match each other exactly.
0	No relation between the two sequences
–1	The two sequences are mirror images of each other.

Other values indicate a partial degree of correlation.

Generation of Signature Sequences

- How to **generate signature sequences of low correlation?**

Two classes:

- There are two classes of signature sequences that are widely used in CDMA systems.
  - Orthogonal Codes
  - Pseudo Noise Sequences (PN Sequences)

- Do self study for signature generation techniques

Spread Spectrum

- A spread-spectrum transmission offers three main advantages over a fixed-frequency transmission:
  - Spread-spectrum signals are **highly resistant to narrowband interference**. The process of re-collecting a spread signal spreads out the interfering signal, causing it to recede into the background.
  - Spread-spectrum signals are **difficult to intercept**. An FHSS signal simply **appears as an increase in the background noise to a narrowband receiver**. An eavesdropper would only be able to intercept the transmission if the pseudorandom sequence was known.
  - Spread-spectrum **transmissions can share a frequency band with many types of conventional transmissions with minimal interference.** The spread-spectrum signals add minimal noise to the narrow-frequency communications, and vice versa. As a result, **bandwidth can be utilized more efficiently.**

OFDM

- Orthogonal frequency-division multiplexing (OFDM) is a method of encoding digital data on multiple carrier frequencies.
- OFDM has developed into a popular scheme for widebandOFDM has developed into a popular scheme for wideband digital communicationOFDM has developed into a popular scheme for wideband digital communication, whether wirelessOFDM has developed into a popular scheme for wideband digital communication, whether wireless or over copperOFDM has developed into a popular scheme for wideband digital communication

OFDM

- OFDM is based on the concept of **frequency-division multiplexing (FDM)**, the method of **transmitting multiple data streams over a common broadband medium**.
- That medium could be radio spectrum, coax cable, twisted pair, or fiber-optic cable.
- Each data stream is modulated onto multiple adjacent carriers within the bandwidth of the medium, and all are transmitted simultaneously.
- Example of such a system is cable TV, which transmits many parallel channels of video and audio over a single fiber-optic cable and coax cable

OFDM

- The **serial digital data stream** to be transmitted **is split into multiple slower data** streams, and **each is modulated onto a separate carrier** in the allotted spectrum. These carriers are called subcarriers or tones.
- The modulation can be any form of modulation used with digital data, but the most common are BPSK, QPSK, and QAM.
- The outputs of all the modulators are **linearly summed**, and the result is the signal to be transmitted. It could be upconverted and amplified if needed.

OFDM

- OFDM is essentially identical to **coded OFDM** (**COFDM**) and **discrete multi-tone modulation** (**DMT**), and is a FDM scheme used as a digital multi-carrier modulation method.
- A large number of closely spaced orthogonalA large number of closely spaced orthogonal sub-carrier signals are used to carry data.
  - Orthogonality□ Two carriers are said to be orthogonal if their correlation is zero.
- The data is divided into several parallel data streams or channels, one for each sub-carrier.
- Each sub-carrier is modulated with a conventional modulation scheme (such as QAM or PSK) at a low symbol rate, maintaining total data rates similar to conventional *single-carrier* modulation schemes in the same bandwidth.

OFDM

- In OFDM, the sub-carrier frequencies are chosen so that the sub-carriers are orthogonal to each other,
  - meaning that cross-talkmeaning that cross-talk between the sub-channels is eliminated and inter-carrier guard bands are not required. This greatly simplifies the design of both the transmittermeaning that cross-talk between the sub-channels is eliminated and inter-carrier guard bands are not required. This greatly simplifies the design of both the transmitter and the receivermeaning that cross-talk between the sub-channels is eliminated and inter-carrier guard bands are not required. This greatly simplifies the design of both the transmitter and the receiver; unlike conventional FDM, a separate filter for each sub-channel is not required.
- Advantage of OFDM over single-carrier schemes is its ability to cope with severe channel conditions
  - for example, attenuationfor example, attenuation of high frequencies in a long copper wire, narrowband interferencefor example, attenuation of high frequencies in a long copper wire, narrowband interference and frequency selective fadingfor

Required Reading

- Stallings chapter 5